Schematic: Arduino Nano - PWM for a Laser with a Poti
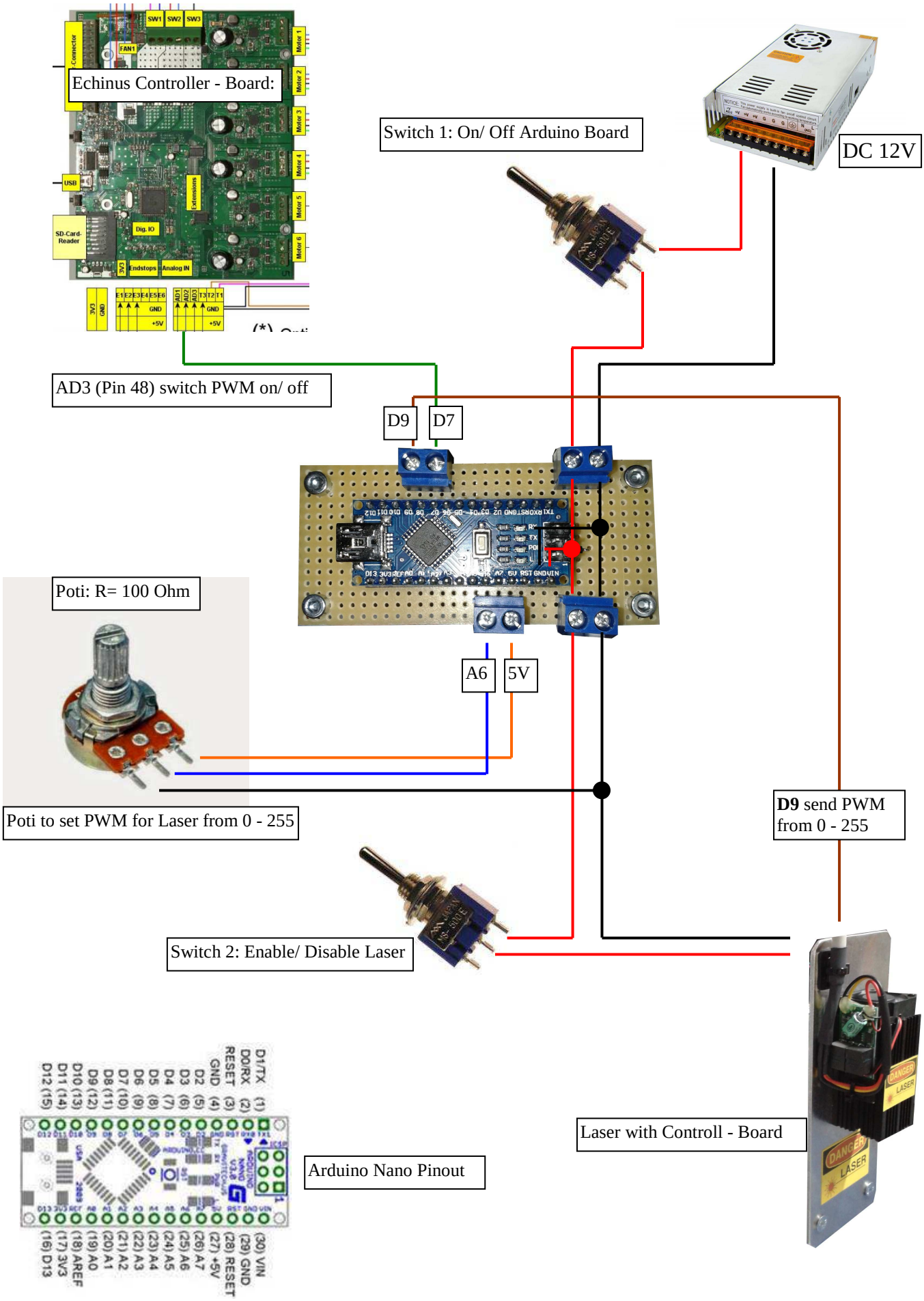
2016-07-16